LOS ANGELES COUNTY - DEPARTMENT OF HEALTH SERVICES
CROSS CONNECTION AND WATER POLLUTION CONTROL PROGRAM
5050 COMMERCE DRIVE
BALDWIN PARK, CA 91706 (626) 430-5290

SAFE PLUMBING PRACTICES

AIRGAP

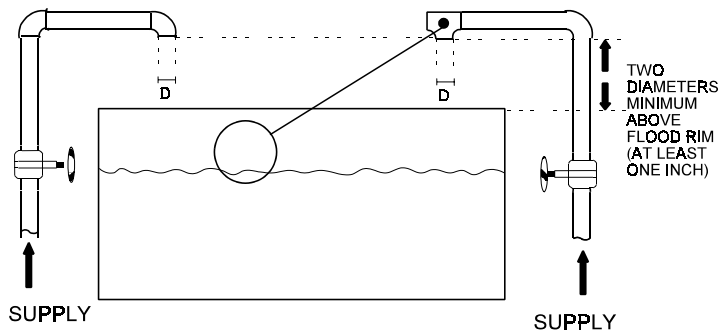

ATMOSPHERIC TYPE VACUUM BREAKER

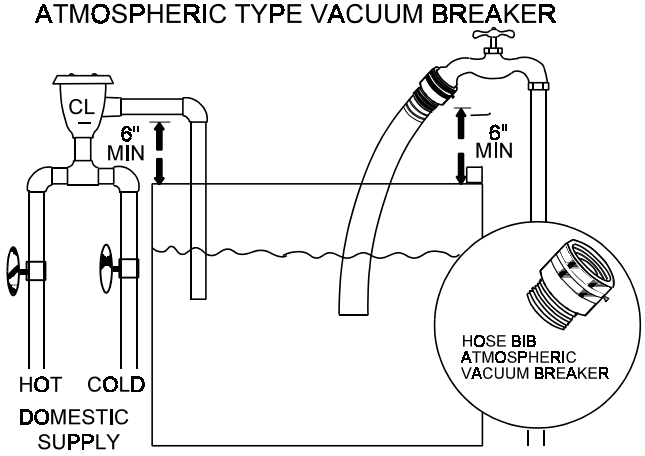

PRESSURE TYPE VACUUM BREAKER

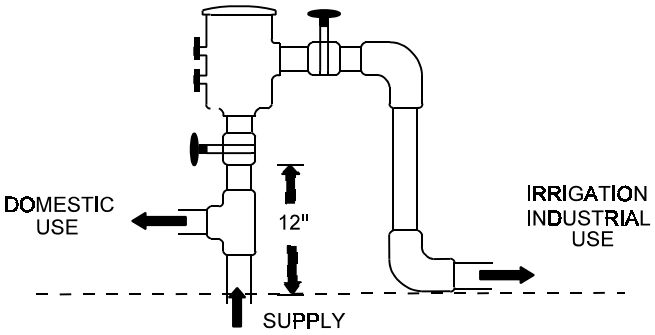

REDUCED PRESSURE PRINCIPLE BACKFLOW DEVICE

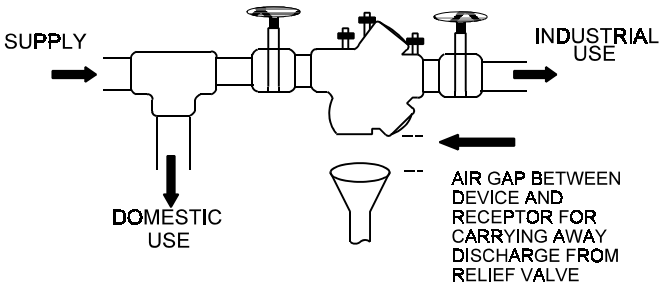

INSTALLATION REQUIREMENTS FOR BACKFLOW DEVICES

1. REDUCED PRESSURE PRINCIPLE DEVICE
   a. at least 12 inches above grade.
   b. in a horizontal position with the relief valve discharging downward.
   c. readily accessible for inline service and test.

2. PRESSURE TYPE VACUUM BREAKER
   a. at least 12 inches above all downstream piping and water use.
   b. not subjected to any backpressure.
   c. readily accessible for inline service and test.

3. ATMOSPHERIC TYPE VACUUM BREAKER
   a. downstream of all valving.
   b. at least 6 inches above all downstream piping and water use.
   c. not subjected to backpressure.
   d. not under more than 12 hours continuous flow.

4. DOUBLE CHECK VALVE ASSEMBLIES
   a. at least 12 inches above grade.
   b. in a horizontal position
   c. readily accessible for inline service and test.

   Note: Double check valve assemblies have very limited application. Water connections to looped domestic services, certain fire systems and meter service protection are examples of where they may be permitted.

OTHER REQUIREMENTS

1. Domestic water is required at all sanitary facilities, drinking fountains, emergency eyewash stations and safety showers.

2. All industrial water piping and outlets must be identified to clearly distinguish them from domestic water systems.

3. Quick couplers must be installed downstream of an approved reduced pressure principle device or pressure type vacuum breaker.

4. New testable backflow devices are to be tested upon installation by a certified backflow device tester and a report filed with this office. Thereafter, each device must be tested on an annual basis.

5. Technical assistance regarding backflow protection device installation and testing is available by calling (323) 881-4140.

   Note: As the department having jurisdiction, this Department shall rule what is acceptable as "readily accessible for service and test". Device installation above false ceilings, within confined spaces, or where flooding may occur are unacceptable.

FIXED AIRGAP

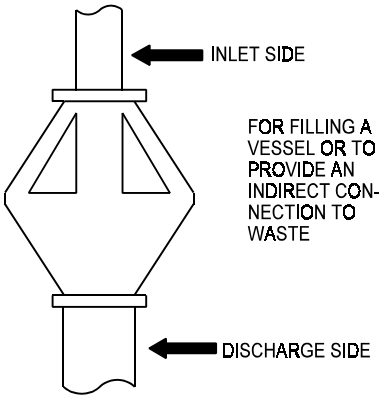

BALLCOCK ASSEMBLY

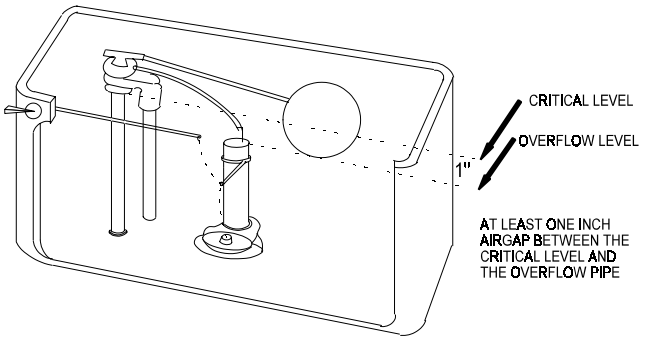

REDUCED PRESSURE PRINCIPLE BACKFLOW DEVICE

- FERTILIZER INJECTION SYSTEM
- QUICK COUPLER VALVE
- SLOPE IRRIGATION
- UP FEED

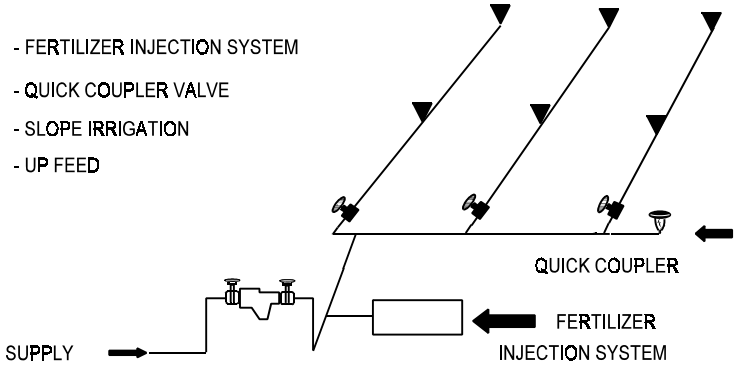

FLUSHOMETER VALVE

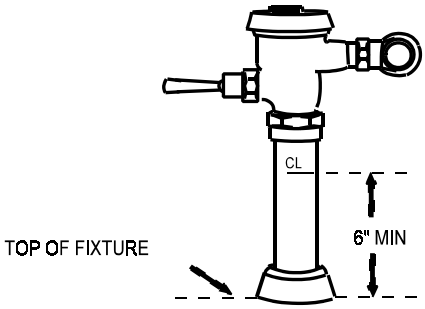

COMBINATION VALVE

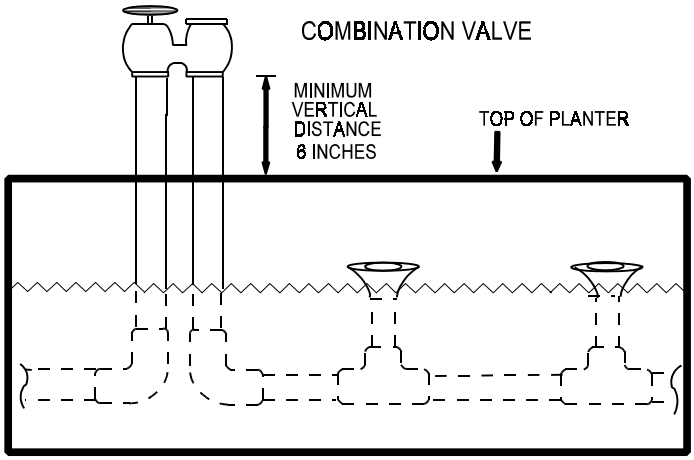

PRESSURE TYPE VACUUM BREAKER

- SLOPE IRRIGATION
- DOWN FEED OR LEVEL
- DOWNSTREAM VALVING
- QUICK COUPLER

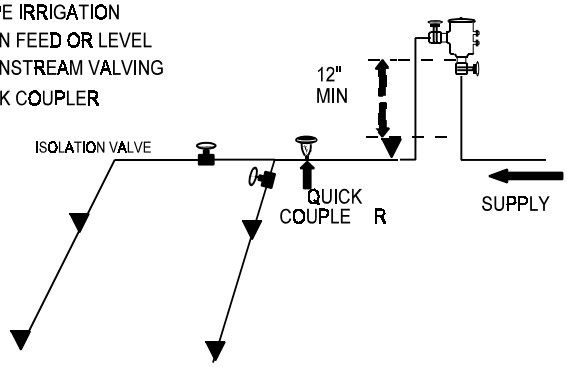

ATMOSPHERIC TYPE VACUUM BREAKER

- SLOPE IRRIGATION
- DOWN FEED OR LEVEL
- NO DOWNSTREAM VALVING

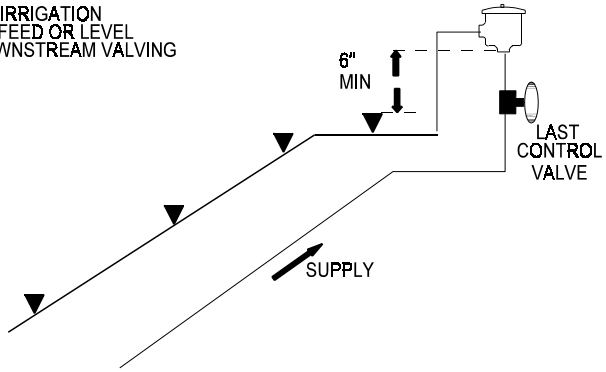
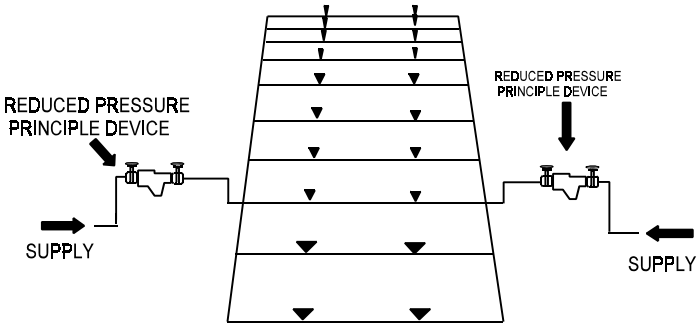
LOOPED IRRIGATION SYSTEMS